BE 19/16-818CPH-P

Revisions	
1	Added country of origin & RoHS

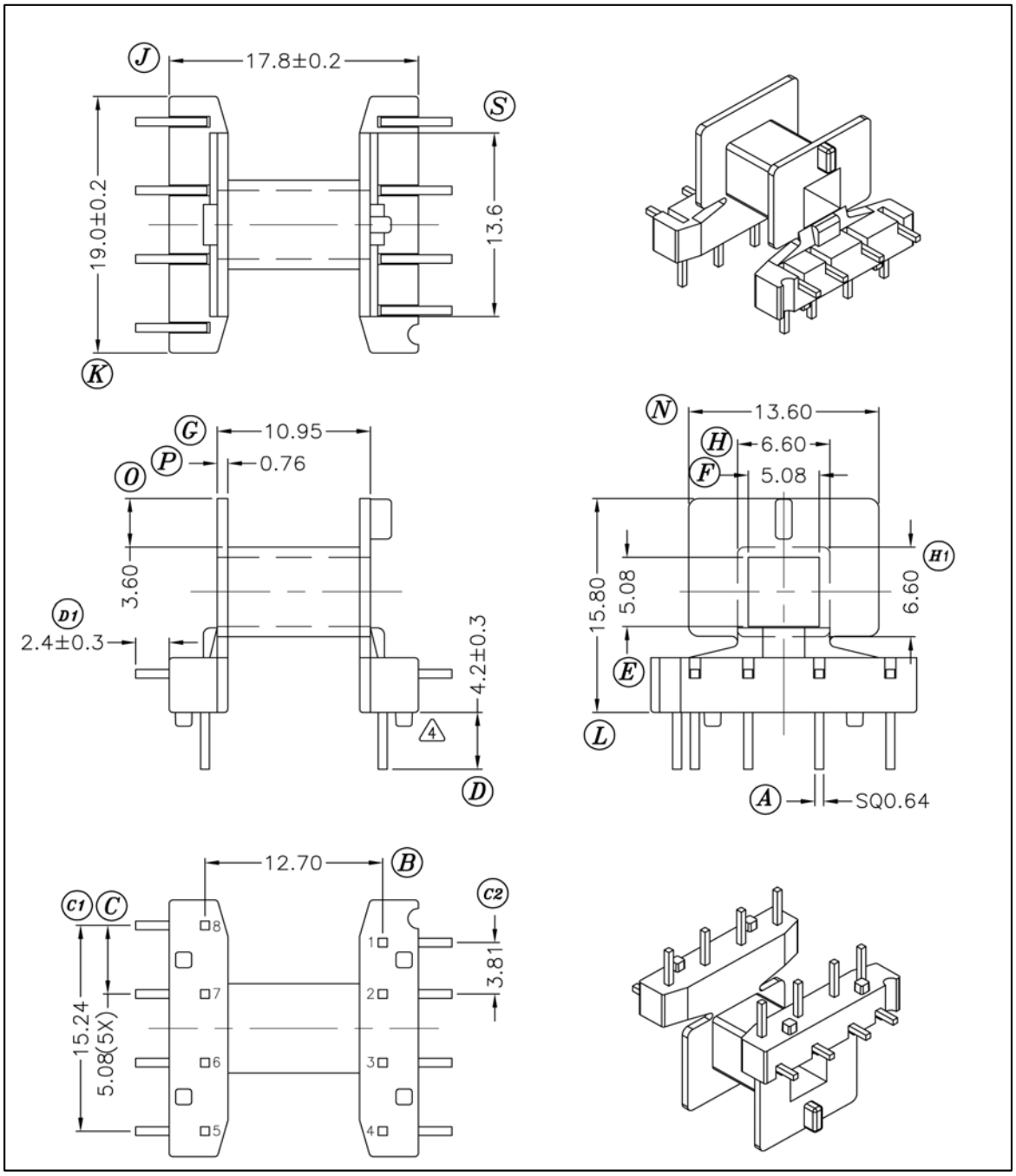

Dimensions in mm

Country of Origin: China	RoHS Certified: YES		
Bobbin Material: E.I. Dupont FR530			Drawing Number: BE 19/16-818CPH-P-1
UL File: E41938	UL Rec: 94-V0	P-1923	Pin Material: Steel Wire (CP)
MH&W International Corp			Pin Tension: 1.5Kgm min / Finish: e3 (JEDEC)
Phone 201-891-8800 Email: sales@mhw-intl.com			Part Number: BE 19/16-818CPH-P